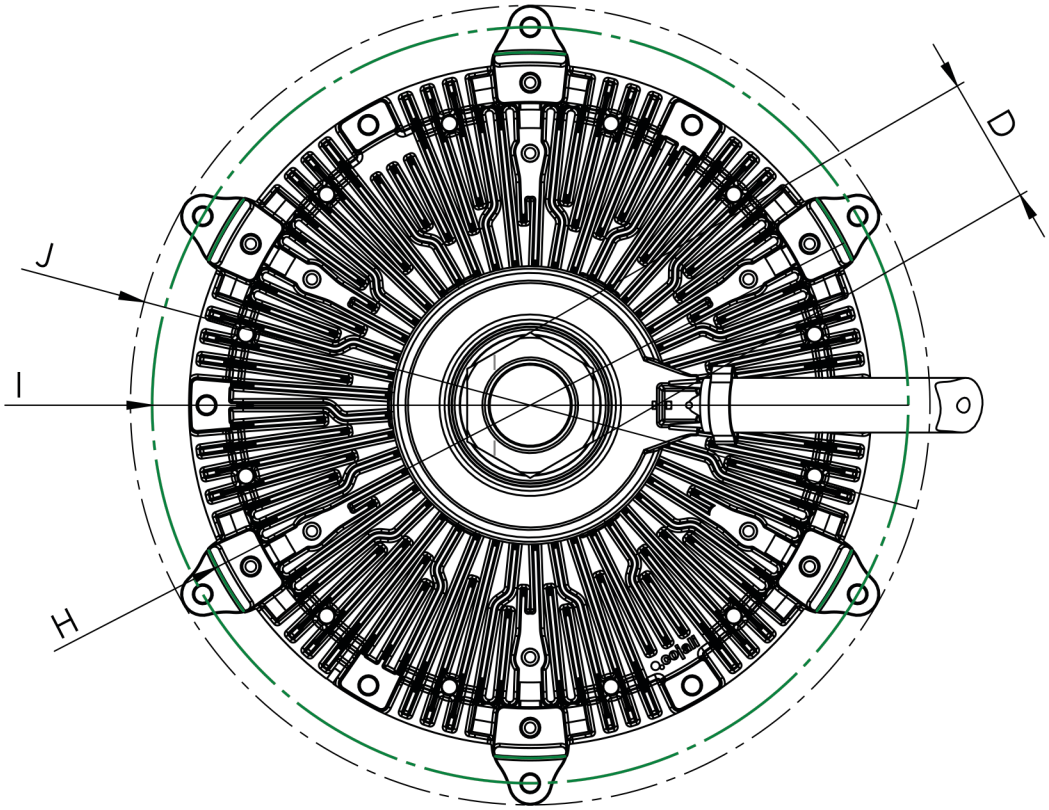

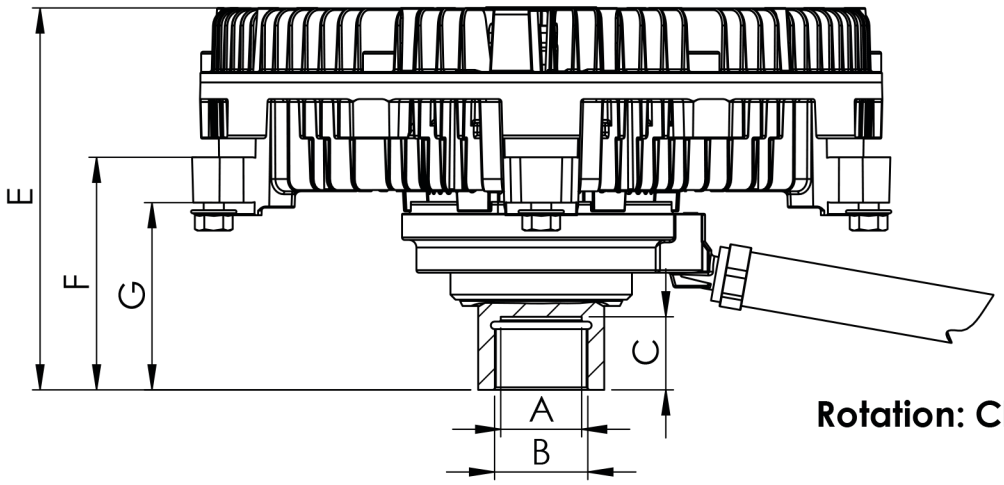

Rotation: Clockwise

Dimensional values

INPUT SHAFT				FAN CLUTCH			
Ref. nº	**Value**	**Ref. nº**	**Value**	**Ref. nº**	**Value**	**Ref. nº**	**Value**
A	∅32.1 mm			E	151.6±1 mm		
B	M36 x 2 LH			F	92.3±0.5 mm		
C	29±2 mm			G	74.3±0.5 mm		
D	50 mm			H	∅280 0 -0.3 mm		
				I	∅300 ±0.5 mm		
				J	∅317.2 mm		

Modification						
4					**Drawn**	
3					21/10/24 J.J.	
2					**Checked**	
1					21/10/24 R.U.	
nº	**Modified**	**Date**	**Reason**	**General Tolerance**	**Assembly**	Technical sheet
Comments				ISO 2768 c-K	**Part name**	T25L
				Material	**ID. Reference**	7203424
					Scale: 1/3	**Sheet 1/1**
					Review: 00	